Revison	Change	Approved	Date
0	Initial release	mje	
3	Include plate, stepped , reformat	mje	5Dec25

Airmaster

Airmaster Propellers Ltd
20 Haszard Rd, Massey
PO Box 374, Kumeu
Auckland, New Zealand

Ph: +64 9 833 1794
Fax: +64 9 833 1796
Email:sales@propellor.com
Web: www.propellor.com

SI-007WS Propeller Spacer Selection Work Sheet

Customer Name		Aircraft Make/Model	
Job Number		Engine Make/Model	

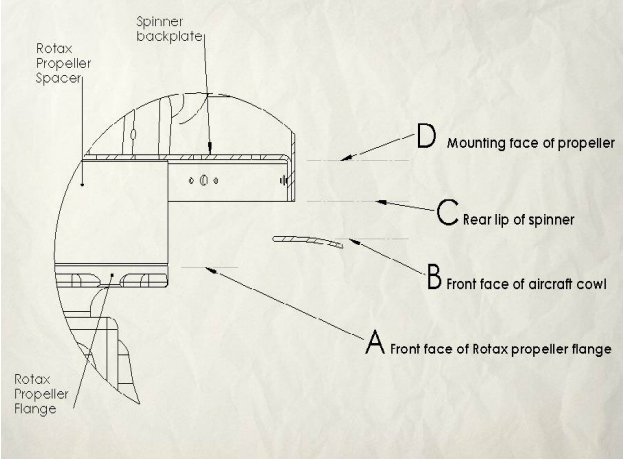

Spinner foldback	C-D		0.00
Spinner / Cowl Clearance	B-C		0.00
Flange to Cowl Distance	A-B		0.00
Slipring Plate (if used) 2mm	P		0.00
Stepped Hub (if used) 19mm	SH		0.000
Spacer Total AB+BC+CD-P-SH	=	0.00	0.000
Closest Size		mm	0.000 in

Spinner dia	8.3in	9in	9.5in	10.3in	11.2in	12.2in	13.0in	14.0in
Fold-back	0	18mm (0.71in)	18mm (0.71in)	20mm (0.78in)	20mm (0.78in)	18mm (0.71in)	18mm (0.71in)	0

Hub	3xx	4xx	5xx	5xxSH	6xxSH	7xxSH
Step (SH)	0mm (0in)	0mm (0in)	0mm (0in)	19mm (0.75in)	19mm (0.75in)	19mm (0.75in)

Spacer

Standard Part	**Imperial Size (in)**	**Metric Size (mm)**
x	0.125	3
x	0.25	6
x	0.375	9
x	0.5	13
	0.625	16
x	0.75	19
	0.875	22
x	1.0	26
	1.125	29
x	1.25	32
	1.375	35
x	1.5	38
	1.625	41
x	1.75	44
	1.875	48
x	2.0	51
	2.125	54
	2.25	57
x	2.375	60
	2.5	64

Extension

Standard Part	**Imperial Size (in)**	**Metric Size (mm)**
	2.25	57
	2.375	60
	2.5	64
	2.625	67
x	2.75	70
	2.875	73
x	3.0	76
	3.125	80
x	3.25	83
	3.375	86
x	3.5	89
	3.625	92
x	3.75	95
	3.875	98
x	4.0	102
	4.125	105
	4.25	108
	4.375	111
	4.5	114
	4.625	117
	4.75	121

Adapter

Standard Part	**Imperial Size (in)**	**Metric Size (mm)**
x	1.5	38
	1.625	41
	1.75	44
	1.875	48
	2.0	51
	2.125	54
x	2.25	57
x	2.375	60
x	2.5	64